Central Tent — Commercial Frame Tent — Central Tent — Quality Frame Tent — Central Tent — Commercial Frame Tent — Central Tent — Quality Frame Tent — Central Tent — Commercial Frame Tent — Central Tent — Quality Frame Tent — Central Tent — Commercial Frame Tent — Central

15x15 Gable Frame Tent

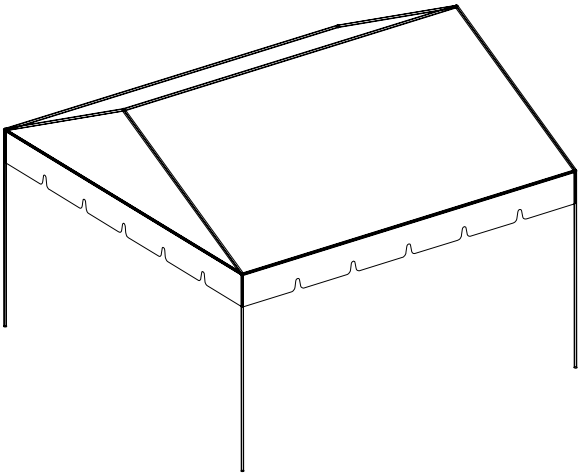

Fittings		
2	Gable Left	G01
2	Gable Right	G02
2	Gable Crown	G03
26	Canopy Pins	P102

Poles			Color
5	14’4”	Spreader	Red
4	7’8”	Rafter	Black
4	7’8”	Legs	Black

Frame Options
2 in. Frame Standard
D-Tube Heavy duty

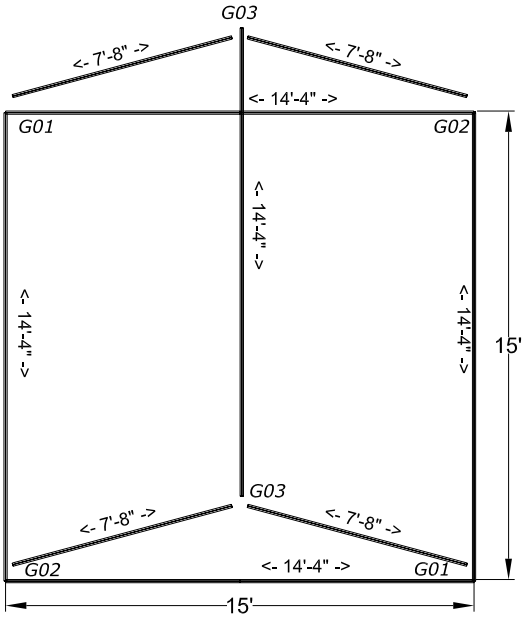

Tops Options
White 13oz. Translucent
White 15oz. Blackout
Colors (Solid or stripe)
Expand 3 Pcs.
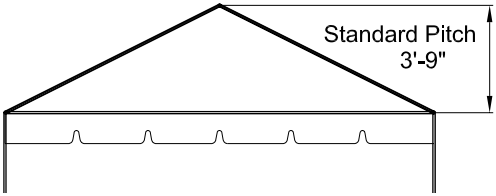
Accessories	
4	Base Plates
4	Corner Leg Braces
8	Ratchet ropes and Stakes (4 Minimum)
60	Feet—Sidewall