10x15 Gable Frame Tent

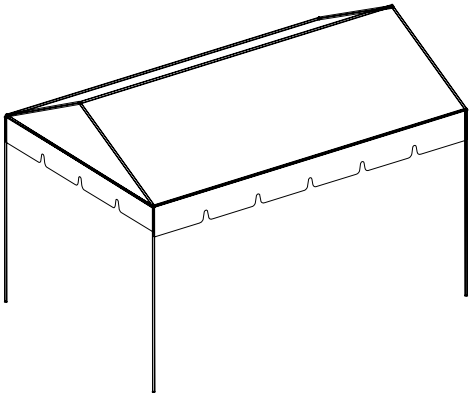

Fittings		
2	Gable Left	G01
2	Gable Right	G02
2	Gable Crown	G03
26	Canopy Pins	P102

Poles			Color
2	9’4”	Spreader	White
3	14’4”	Spreader	Red
4	4’11”	Rafter	Blue
4	7’8”	Legs	Black

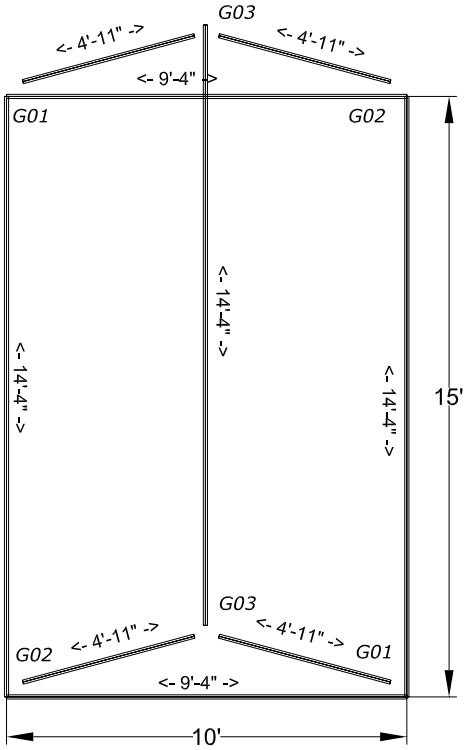

Frame Options
1 in. Frame
2 in. Frame Heavy duty

Tops Options
White 13oz. Translucent
White 15oz. Blackout
Colors (Solid or stripe)
Expand 3 Pcs. Velcro only

Accessories	
4	Base Plates
8	Ratchet ropes and Stakes (4 Minimum)
50	Feet-Sidewall

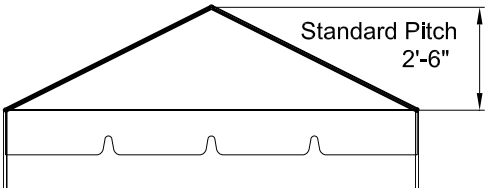

Central Tent — Commercial Frame Tent — Central Tent — Quality Frame Tent — Central Tent — Commercial Frame Tent — Central Tent — Quality Frame Tent — Central Tent — Commercial Frame Tent — Central

Central Tent — Commercial Frame Tent — Central Tent — Quality Frame Tent — Central Tent — Commercial Frame Tent — Central Tent — Quality Frame Tent — Central Tent — Commercial Frame Tent — Central Tent — Quality Frame Tent — Central Tent — Commercial Frame Tent — Central